SECUREDGE EX CANTED FASCIA

EXISTING BEVELED WOOD NAILER

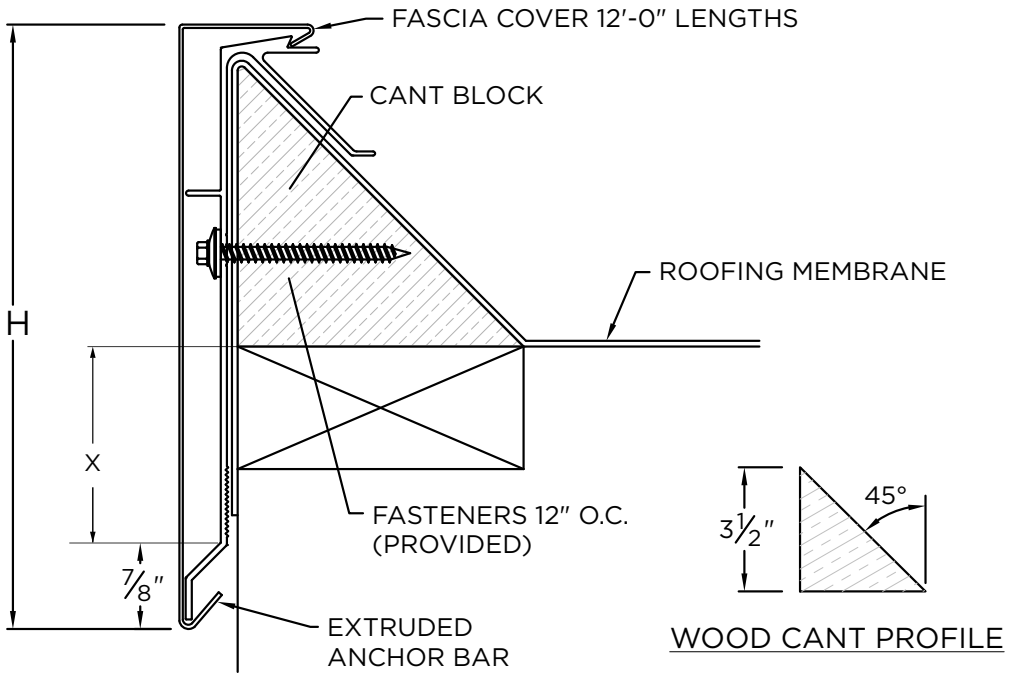

WOOD CANT PROFILE

NOTES

- Fascia cover provided with splice plates
- 10" cover not available in 24 ga. galv. steel or .040" aluminum
- 5.5" extruded bar varies in design at lower kick
- For non-90 miters, see separate print approval
- Product should be installed per provided installation instructions

DIMENSIONS

PRODUCT ID. NO.	H DIM	X DIM	NAILER COVERAGE
☐ AEFC-550	5 1/2"	2 5/8"	1 NAILER
☐ AEFC-750	7 1/2"	4 5/8"	2 NAILERS
☐ AEFC-850	8 1/2"	5 5/8"	3 NAILERS
☐ AEFC-1000	10"	7 1/8"	4 NAILERS

MATERIAL

☐ 24 Ga. Galv. Steel
☐ 22 Ga. Galv. Steel
☐ .040" Aluminum
☐ .050" Aluminum
☐ .063" Aluminum
☐ OTHER: _____

Color: _____
Finish: _____

Substrate: ☐ Wood ☐ Masonry ☐ Metal

If substrate is not given, wood fasteners will be provided.

QUANTITIES

☐ Lineal Feet (12'-0" Lengths)
☐ Outside Miter (90°)
☐ Inside Miter (90°)
☐ Right Endcaps
☐ Left Endcaps

☐ Right Endwall Flashing
☐ Left Endwall Flashing

☐ Overflow Scupper ☐ Style A ☐ Style B
☐ Spillout Scupper ☐ Style A ☐ Style B
☐ Downspout Scupper ☐ Style A ☐ Style B

Downspout Size ☐ x ☐
Max. Downspout Size is 5" x 6"
Custom print needed for larger sizes.
Style A=Tapered 1.5" Drop | Style B=Flat

PROJECT INFO

Project Name:

Architect:

Roofing Contractor:

Project Type:

☐ By selecting this box you have verified and confirmed that dimensions, sizes, and quantities are correct. All products will be installed in strict accordance with printed instructions.

Date:

Customer Service
866-458-3537
(Metal-Era)

SHT #: _____ of _____
B ?RC: 09/13/24
DRN BY: JJC
CKD BY: MM
DWG #: 15010-1646
REV: J